A 3-Stage FTL Drive, for Inter-Stellar Space Propulsion

Istvan Nagy June 2014, buenos@opencores.org

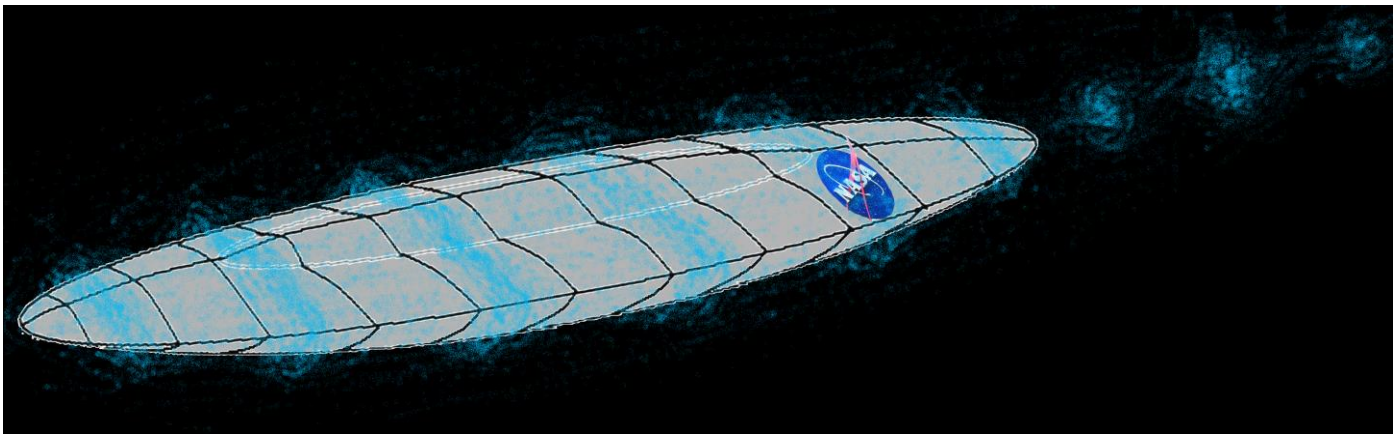

This paper describes a way of implementing anti-gravity based vehicle propulsion in a way that can enable inter-stellar space travel. Since I am not a physicist, and most of the principles that this study relies on does not exist yet, my paper can be considered a speculation. Before dismissing it, please read it anyway as it might have something useful in it.

The propulsion would be based on electrically induced anti-gravity, that is not invented yet, but it is assumed that it will be implemented at some point in the future. Once it is invented, it could be controlled in the way described here to achieve 1…n times the speed of light. This paper focuses on the control methods of the propulsion. The paper describes 3 levels, where the levels refer to capability-sets of different designs. The engine or propulsion would be the set of surface panels of the spacecraft, and not some kind of rocket engine with an exhaust at the back. To accommodate all three levels, the assumed shape of the spacecrasft would look similar to a kayak. For example level-1 can only reach Earth orbit from the surface, while Level-2 can reach the speed of light while it can still lift up from the surface. Level-3 could reach multiple times the speed of light that is suitable for interstellar space travel, while it could be designed to be able to lift off directly from the planet's surface with some compromise. Level-1 is based on anti-gravity, level-2 is based on space-time curvature reduction (keeping the energy/momentum constant, but accelerating by reducing effective mass, aka space-time curvature caused by the ship's mass), and level-3 is based on gravitational waves generation while the spacecraft's mass is already zero. Reaching other solar systems in a practical manner would require traveling at multiplies of the speed of light. For example a solar system 10 light years away and a maximum speed of 100x the speed of light would result in a little over a month one-way trip. Traveling within our solar system would require a sub-ligh-tspeed spacecraft that is practically fast but has no difficulties caused by the relativity time effects.

Level-1 space craft: planet surface to orbit

This ideally has a traditional UFO or saucer shape, although it could have other shapes, like a sphere, cube (corner down), diamond, and ellipsoid…. The saucer-shaped vehicle has 4 anti-gravity levitation panels on the bottom surface for maximum maneuverability. They have triple purpose: lifting, deceleration while descending, and direction control or horizontal acceleration /deceleration. The anti-gravity panels on the top can help in case the spacecraft flips over to recover its controllable safe orientation. To help stability, the center of gravity is below the horizontal dividing line. A flat shape is more efficient for lifting heavy weights.

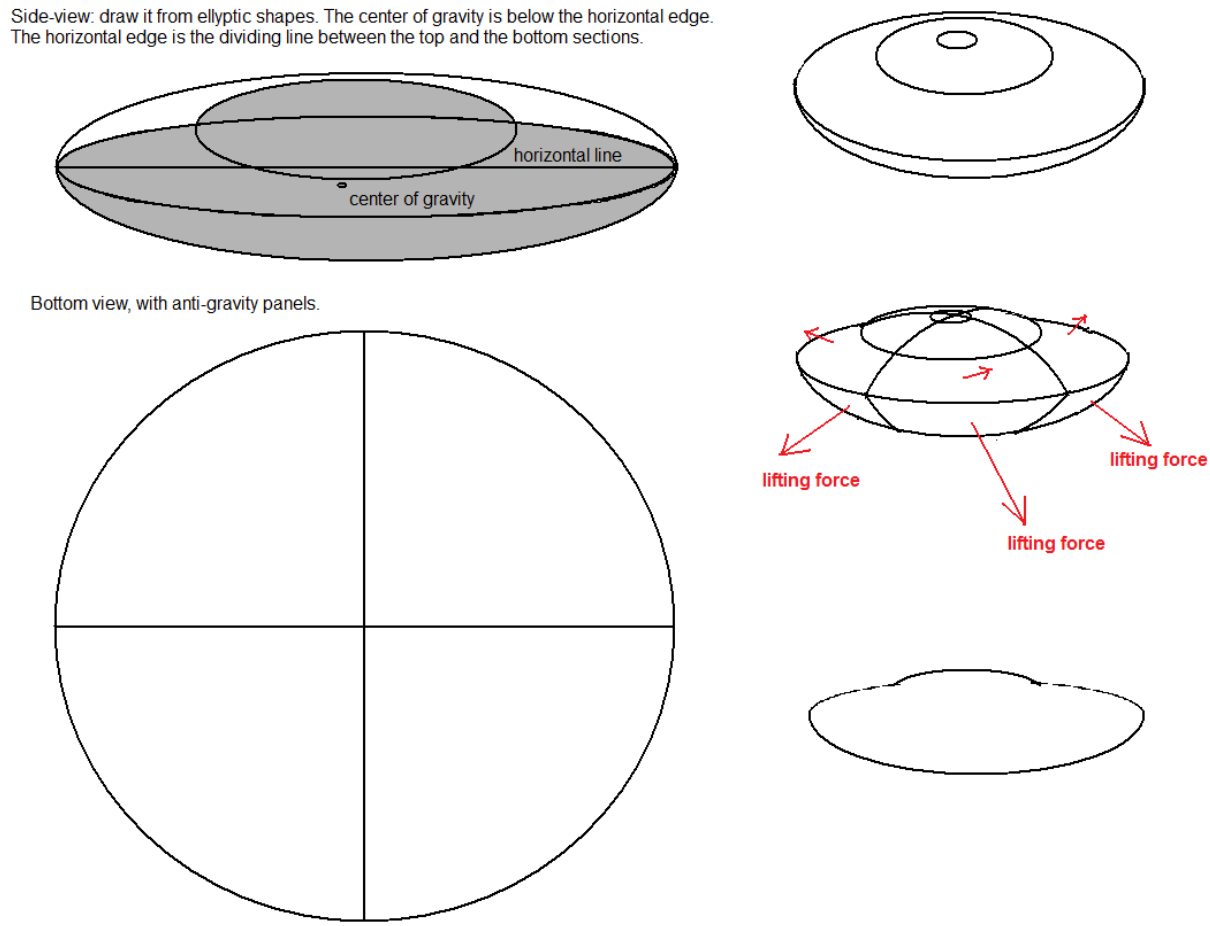

The level-1 anti-gravity spacecraft can be levitating above the planet's surface without having to orbit around it at high speeds. This way the re-entry can happen at very low speeds, not requiring a heat shield.
The anti-gravity panels would be electrically controlled. To achieve anti-gravity on a surface panel, the panel would have to bend the space-time fabric in the opposite way to how normal objects with a mass do. When 2 objects with mass bend the fabric of space-time towards themselves, then the 2 objects attract each other through gravity. Anti-gravity would mean bending the space-time in the opposite direction; instead of making it more dense (bending towards itself) it would make it more sparse (bending away from itself) at or near the body. While turning on the anti-gravity on the vehicle, we have to make sure that we will not create a full-body anti-gravity as it would require to transition through a no-bend state, which is the operating mode of the level-2 spacecraft that travels at the speed of light. This way we only create anti-gravity on the bottom side of the vehicle.
Since the vehicle would eliminate the effects of gravity, it would not require putting in a lot of or any work/energy to lift up or speed up. Currently chemical rockets and jet airplanes require burning a huge amount of fuel to obtain the required kinetic energy, speed and altitude.
The level-1 vehicle could be used to leave the planet's surface, to go to the Moon and to Mars, or to replace jet airplanes in international travel. For the international travel the vehicle would ideally lift up to a hundred kilometers altitude to be able to travel at maybe Mach-10 without air friction-caused surface heat up.

Level-2 space craft: reaching the speed of light

This stage is based on the simple law in physics:

$$E_m = \frac{1}{2} m v^2$$

or relativistic way:

$$E = \frac{mc^2}{\sqrt{1 - \frac{v^2}{c^2}}}$$

If a vehicle or space craft is already moving in space, without using any jet propulsion that could increase its kinetic energy we can say that the kinetic energy (E_m) is constant. The initial speed before turning on the level-2 mode is obtained either from the level-1 liftoff, of from small rocket engines. The initial speed can be very low, a few miles per hour should be sufficient, but set towards the exact direction of the destination. We know from Einstein that the mass of an object is directly connected to the bend that it causes in the

space-time. Therefore if we decrease the curvature in the space-time around the already moving spacecraft, then if will look like as if the mass of it has decreased. Based on the equation when the mass decreases while the energy (and momentum) is constant, the speed must increase.

$$v = \sqrt{(E^2 - m^2c^4) * \frac{c^2}{E^2}} \quad \rightarrow \quad \lim_{m \to 0} v = \lim_{m \to 0} \sqrt{(E^2 - m^2c^4) * \frac{c^2}{E^2}} = c$$

Considering the theory of relativity the speed will not approach infinity at zero mass, but it will approach the speed of light. If we decrease (compensate) the mass of the spacecraft to zero, then its speed must reach the speed of light, which is the target of the level-2 spacecraft. To compensate for the space-time curvature or gravity field caused by the original mass of the spacecraft, we need anti-gravity panels on the whole surface of the spacecraft. This way we can reach the speed of light without having to increase the kinetic energy of it to infinity, actually without putting any energy into the acceleration.
The shape of the level-2 spacecraft can be the same as the level-1 to support both levels, or it could be a sphere or ellipsoid to make it optimal for level-2.
When the spacecraft reaches the speed of light, the time inside would freeze, but maybe there is a way out of this. According to Einstein the mass of the spacecraft reaches infinity at the speed of light. Also according to Einstein the time goes slower near larger masses. Combining these 2 suggests that maybe the time in the fast spacecraft freezes due to its infinite mass. If that is true, then if we can avoid increasing the mass (to infinity) then we can also avoid the time freezing inside the spacecraft. The time being frozen inside the spacecraft would be a problem, as the astronauts would miss the target and would never step on the brake upon arrival. If we cannot resolve the time problem, we can still travel a little below the speed of light, lets say at 90%. This way the astronauts would not be bored too much with a long trip as the time would be slow enough, but it would not be too slow to become unable to realize the arrival.
Since the propulsion system is the surface of the vehicle, we cannot have windows on it, only tiny cameras and other sensors.

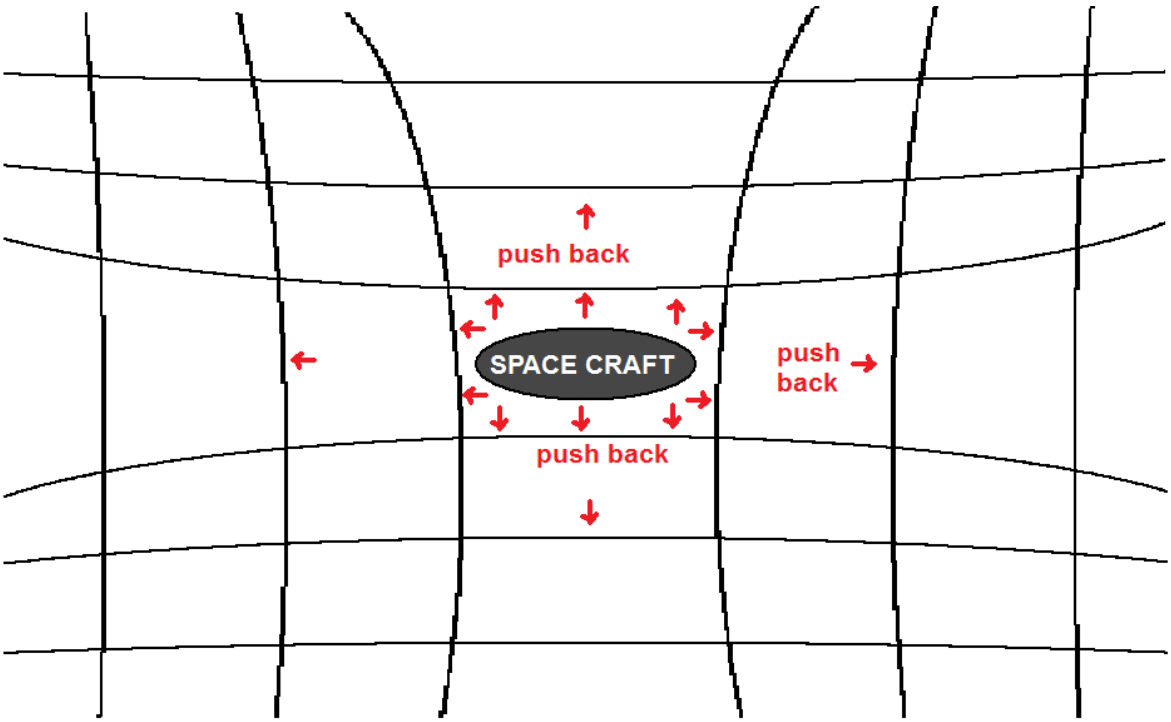

Level-3 space craft: multiple times the speed of light

If we can reach 100% of the speed of light with the level-2 spacecraft, then it means that we are traveling mass-less or without any bend on space-time. Being mass-less and travelling at the speed of light are requirements for the level-3 drive to be turned on and be operational. At these conditions, we could further accelerate by creating gravity waves on the surface that are traveling on the surface faster than light. At time of turning on, the wave speed matches 1x the speed of light exactly. This wave would have to be super positioned on the top of the static antigravity field that created the no-bend space-time fabric around the

vehicle. The amplitude could be a few percent of the base level to sufficiently avoid destroying the no-mass field. Since the mass if the vehicle at this point is virtually zero, a very small amplitude and energy wave could be sufficient to propel the spacecraft. Instead of creating a wave at one source and expecting it to move faster, we can create multiple waves at a 'd' distance and 'P' phase difference that would only be one wave at the speed of light if the vehicle were moving faster than the speed of light. We generate waves using rings of anti-gravity panels along the surface; each ring would be broken into 4-8 sections to also work in level-1mode. The centers of the adjacent rings have a distance 'd' from each other, each pulsing at 'f' frequency and they have a 'P' phase difference from their neighbors.

Wave direction:
It is not clear to me yet whether the initial gravitational wave has to travel the same or the opposite direction to the spacecraft's direction. If it is the opposite direction (like a rocket exhaust), then the initial (when turning the wave on while travelling at the speed of light) gravity wave has to have 2 times the speed of light relative to the spacecraft going towards the end of the vehicle, while if it is the same direction (it is like climbing a rope) then we have to start up with a standing wave.

There are 2 options for control:

1. Constant phase with frequency control: This is better suited for opposite direction type wave. When we turn on the level-3 drive, we are traveling at the speed of light, with these example parameters: set a certain frequency that has 4 meter wave length, drive the rings 90 ^{o} from each other and have the rings 0.5m away (quarter wave divided by 2 for the 2x light speed wave, QWL=1m) from each other. Then increase the frequency while keeping the 90 ^{o} phase difference constant between the rings. The ship should accelerate. If the controllable frequency range is f0…100*f0, then we can reach up to 100 times the speed of light.
2. Constant frequency with phase control: This could be used for both same and opposite directional waves. For opposite-mode when we turn on the level-3 drive, set the same parameters as in constant frequency mode. Then start decreasing the phase difference while keeping the frequency constant between the rings. The ship should accelerate.

Example calculation: Constant phase (P=90°) mode with opposite direction mode. d=0.5m, With P=90° and d=0.5m the resulting wavelength is lambda=2m. After reaching the speed of light in level-2 mode, we have to turn on the level-3 mode wave at matching speed, that is apparent wave being 2x LSP along the vehicle. This requires *lambda=2c/f* to be satisfied, so the required frequency = *f0 = 2c/lambda = 2 * 2.998*10^8 m/s / 2m = 0.29GHz* for 1 LSP. We can measure the vehicle speed with numbers of lights peed (LSP). In order to accelerate further, to n*LSP, we simply increase the frequency. *f = f0 * (n-1)*. For example to reach 10 LSP speed, we need a frequency to be linearly increased to from 0.29GHz to 2.61GHz. Each ring receives an RF control sine wave signal. The adjacent rings receive the same frequency, same amplitude, but with P phase difference.

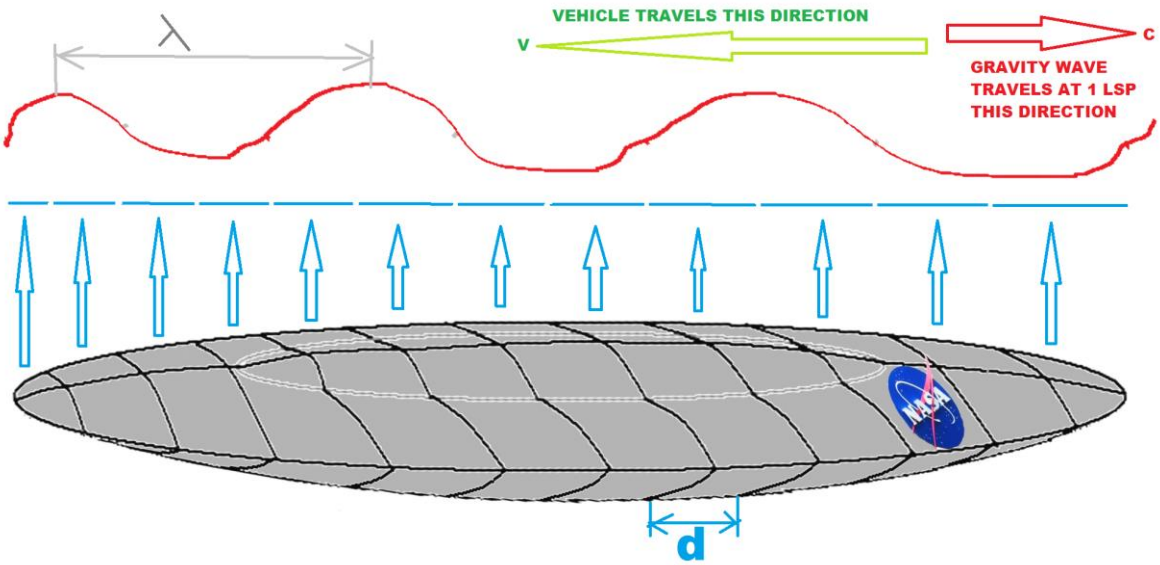

Example2: Constant frequency mode with same direction mode. d=0.5m, With P=45° initial phase difference and d=0.5m the resulting wavelength is lambda=4m. After reaching the speed of light in level-2 mode, we have to turn on the level-3 mode wave at matching speed, that is apparent wave being 0x LSP along the vehicle, a standing wave. This requires lambda=1c/f to be satisfied, so the required frequency = *f0 = 1c/lambda = 1 * 2.998*10^8 m/s / 2m = 0.145GHz* for 1 LSP. This wave is a standing wave, which requires a different control method. Instead of sending same frequency/amplitude sine waves to each ring, we send same frequency and phase with different level of amplitude modulation. The full amplitude wave to every m=360/P ring, and the -1x full amplitude wave to every m/2 ring, all other rings in between would receive reduced amplitude waves. The first ring (n=0) receives S0 full amplitude signal, the rest of them receives *Sn=S0*Sin(n*P+90 ^{o})* amplitude signals from the same reference source (0 degree phase difference). When we want to accelerate above 1 LSP, we start moving the wave along the body of the vehicle towards the end, breaking the standing wave and making it a moving wave. To achieve that, the wave has to travel backwards at *vw=v-c* speed, each ring will receive a sine wave at an amplitude of *Sn=S0*Sin(n*P+90°+ 360*((v-c)*t)/lambda)* . At or above 2 LSP vehicle speed, the amplitude would need to be modulated too fast, the modulating signal might be higher frequency than the carrier. To avoid having to do such difficult AM, the synthesis of the control signals in this mode needs some more research.

For constant frequency mode, the phase delay can be controlled by appropriately cut internal cable lengths and FPGA internal DLL (programmable delay) circuits. The DLLs can be controlled during operation, while the cable lengths cannot be. By controlling either the delay from the reference clock to each ring or by adjusting the clock frequency we can adjust the speed from 1x the speed of light to n>1 times the speed of light.

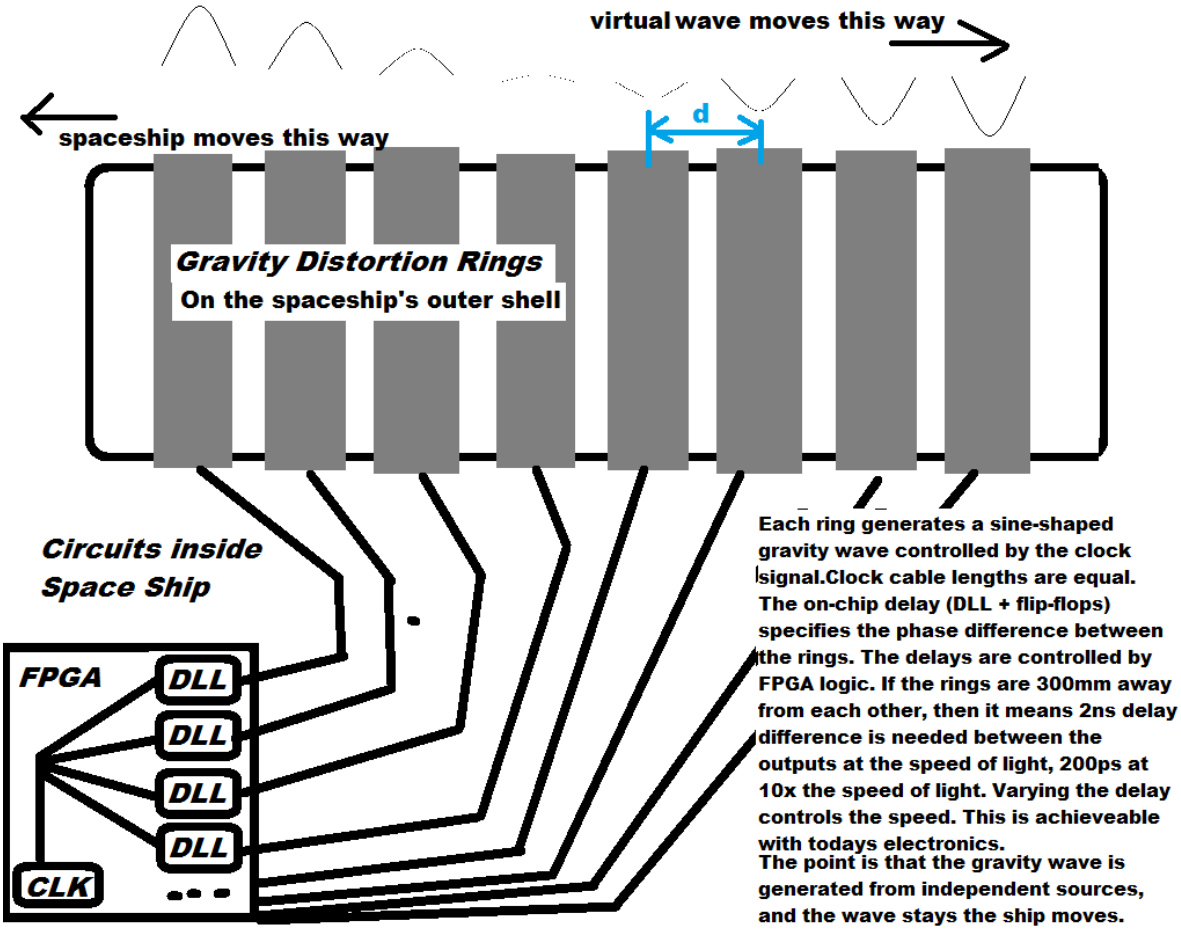

Possible vehicle shapes:
Taking the ideal level-1 shape the saucer we have to elongate it and redesign the anti-gravity panel divider lines to allow for the level-3 mode as well. The result is a kayak-saucer-shaped vehicle.

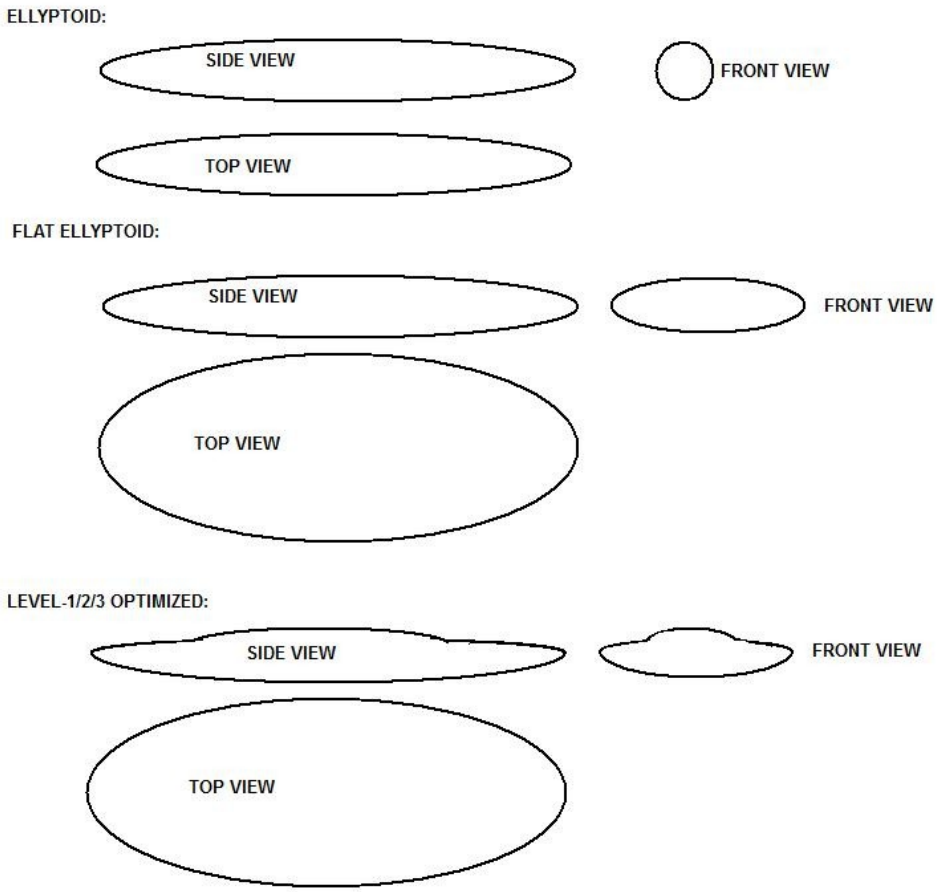

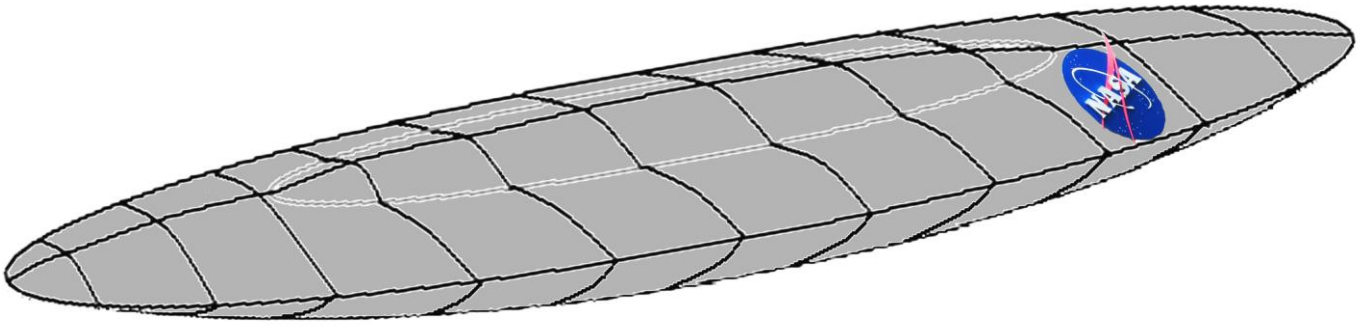

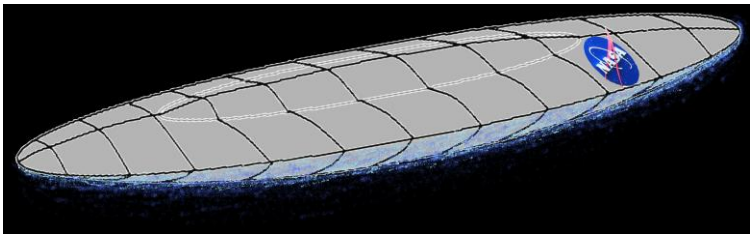
Anti-gravity field in Level-1 mode

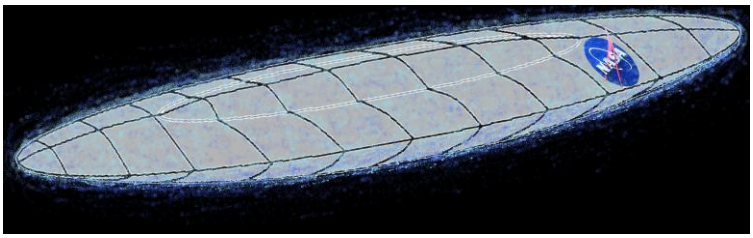
Anti-gravity field in Level-2 mode

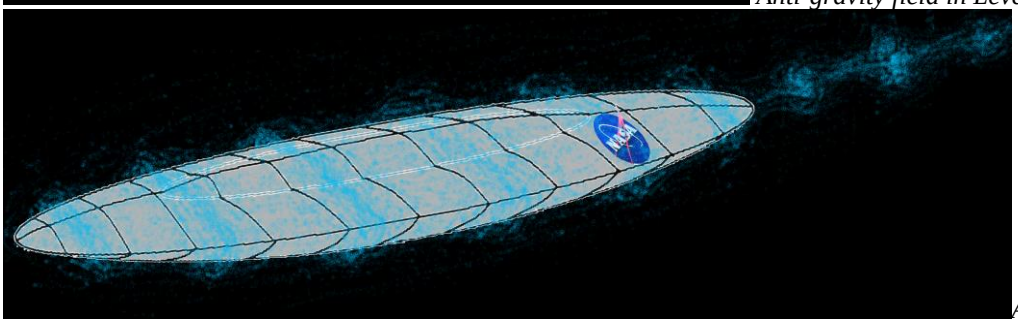
Anti-gravity field in Level-3 mode

Space-time bend summary

The exact same set of anti-gravity panels can be controlled in different modes and patterns to drive the vehicle in any of the level-1/2/3 modes.

L1

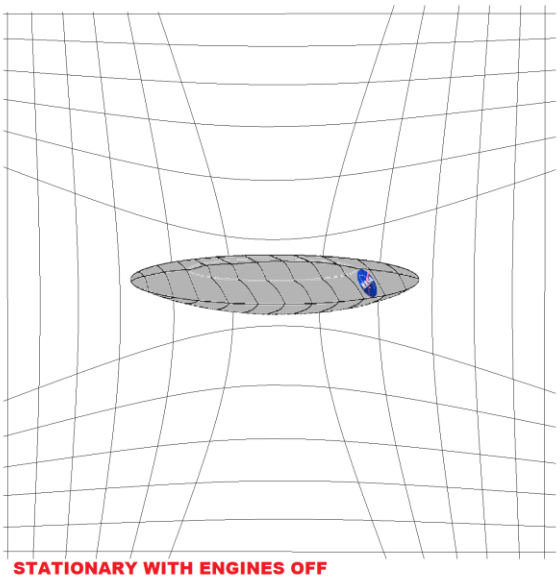

STATIONARY WITH ENGINES OFF

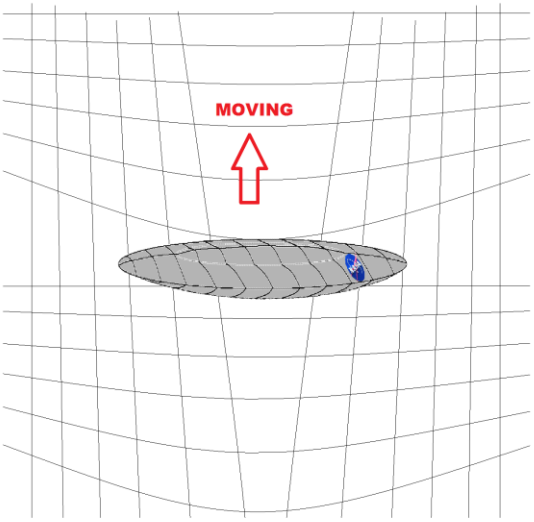

LEVEL-1 MODE, NEGATIVE PRESSURE UNDER, LIFT

L2

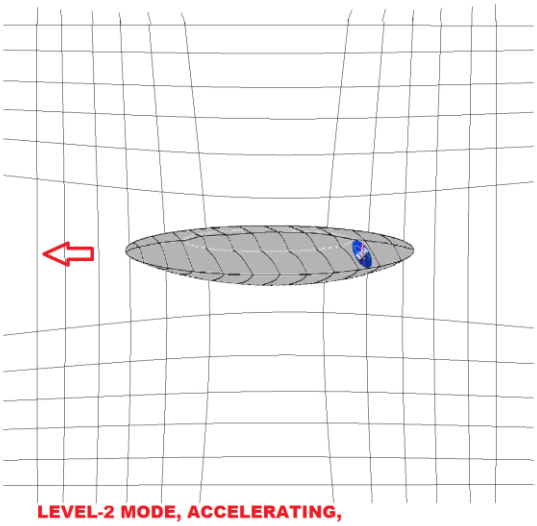

LEVEL-2 MODE, ACCELERATING,
BY MULTIPLYING INITIAL VELOCITY

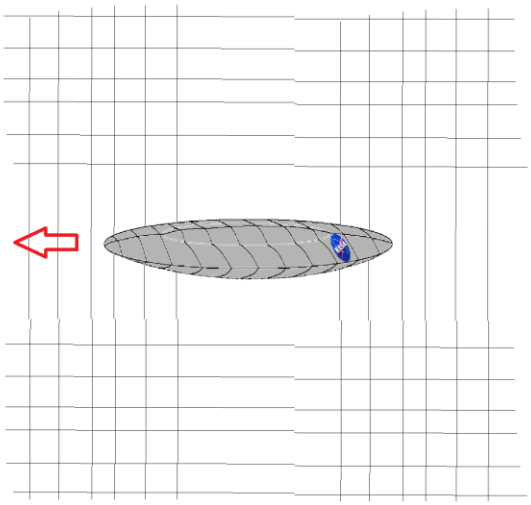

LEVEL-2 MODE, WHEN REACHED SPEED OF LIGHT

L3

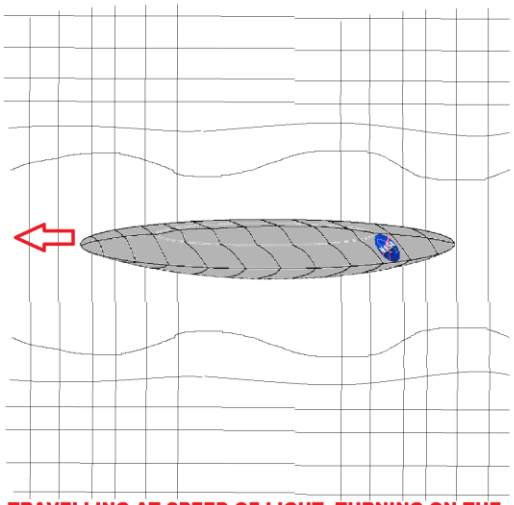

TRAVELLING AT SPEED OF LIGHT, TURNING ON THE
LEVEL-3 MODE, WITH FREQUENCY MATCHING 1LSP.

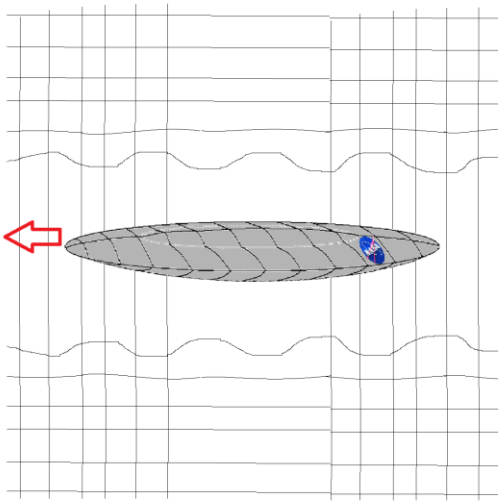

IN LEVEL-3 MODE, INCREASING THE FREQUENCY
AND DECRESING THE WAVELENGTH-STRETCH,
ACCELERATING ABOVE 1LSP.

Limitations

There is a potential problem. As the stage-2 acceleration is based on multiplying velocity, it may multiply the total velocity, not just the velocity relative to Earth. The total velocity is dominated by the speed of Earth around the Sun, the speed of the Sun around the Milky way, and the speed of the Milky way from the center of the Universe (big bang expansion). So the possibility is that the spacecraft will be able to only go in one direction, which is the direction of the most dominant velocity component vector, away from the center of the Universe. If that is true, then we can only accelerate in a certain direction (away from the center of the big bang), and as a one way trip only. This may be a problem, although if we settle for that small portion of the universe that is on this path and to one-way colonizing expeditions, then it may be okay. Another possibility is to accelerate using stage-2 to the speed of light in that one direction, but activate stage-3 drive in a different direction to propel and steer away from that path. That case the explorable part of the universe would not be along a straight line but like a funnel-shape, although still only one-way missions could be possible. If the stage-3 drive can do 100x the speed of light, then the cone would be broad enough to include 49% of the universe to be explorable. We may even be going the opposite direction with stage-3 relative to the stage-2 speed vector, then the explorable universe becomes 100% of the universe, and allow coming back (return trip).

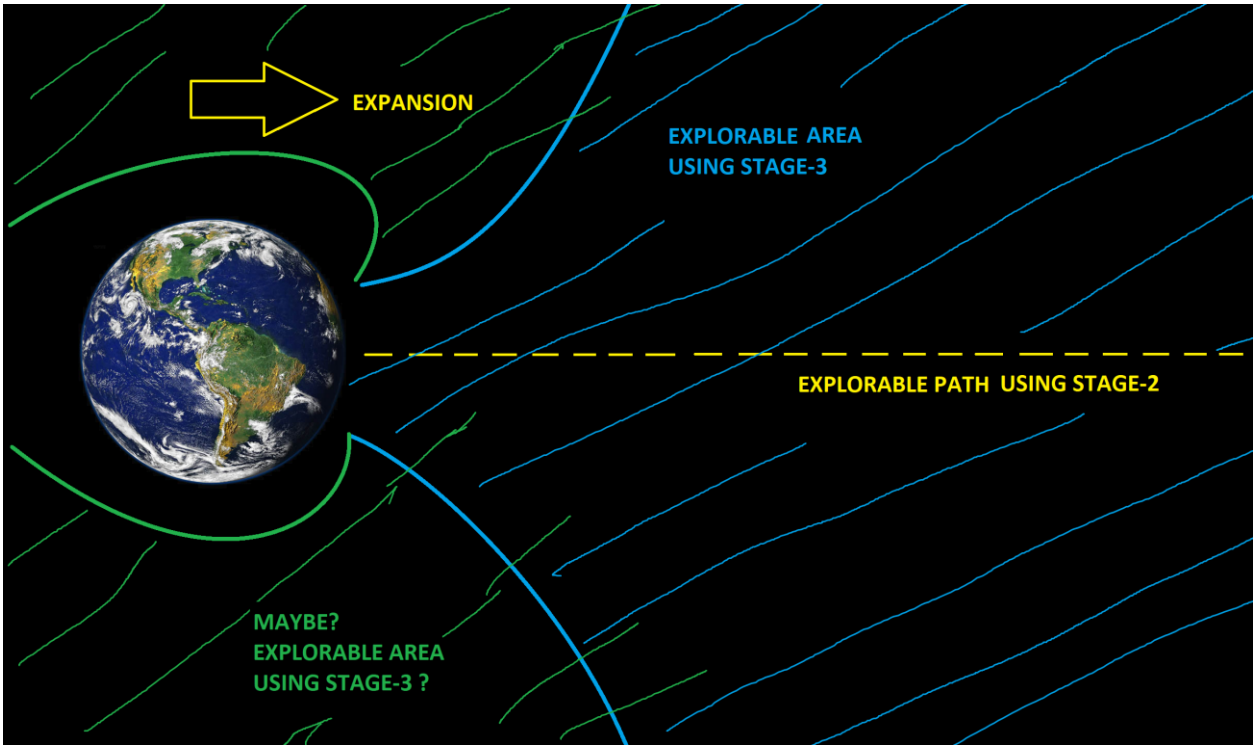

Another potential issue is what happens with the initial momentum or motion energy that the spaceship had before turning on stage-3? When stage-2 reaches the speed of light, a zero-weight vehicle cannot carry motion energy. Where does the energy go? Dissipate into light or an explosion, similar to a sonic boom? Can the vehicle and travelers survive the explosion? Can it be influenced to be non-harmful light waves, instead of deadly x-rays? How do we decelerate from the speed of light later at the end of the trip? Maybe deceleration will be a sudden halt from 200000 mph to 0 mph in an instance, since the ship will have no motion energy to slow/scale-down to. To speed up again in deep space it would require some traditional propulsion. The exact operational principles are not clear yet, may require some experimentation.

To change direction while traveling at speed, the space ship has to change orientation. This can be done by similar means to quad-copter drones. That requires 4 spinning wheels inside the spaceship for 2D alignment, or 6-8 wheels for 3D. The wheels are in pairs, and rotating opposite direction. The relative RPM of one pair to the other pair is matched and the vehicle stays in the same orientation. But if one pair speeds up while other wheel pairs remain at the same RPM then the vehicle turns slowly around its own axis. This could be

also used for stage-1 mode maneuvering, as well as during stage-3 speed vector super positioning on top of the stage-2 speed vector (re-orienting before turning on stage-3).

Anti-gravity panels

These should be electrically controlled panels along the vehicle's surface. Ideally the anti-gravity panel should be electrically powered and controlled, to be a modern low-maintenance device. The exact internal operation is unknown yet, someone has to invent it. This paper is not about the panel's internal operation, but about the control methods for it. Once someone else invents it, the hereby-described control methods could be used to achieve fast and efficient space travel with it.